STEELCRAFT P/N: SCDHWT48X120

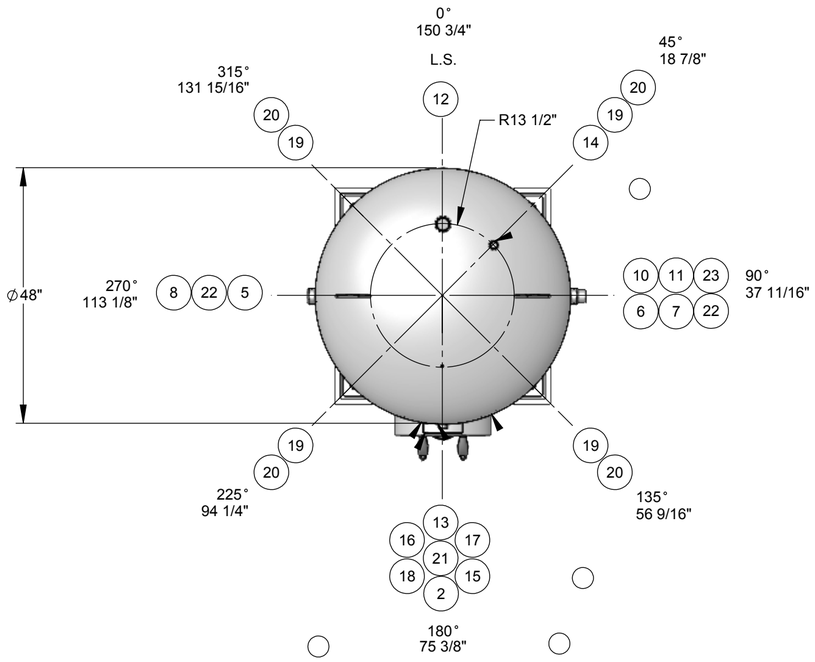

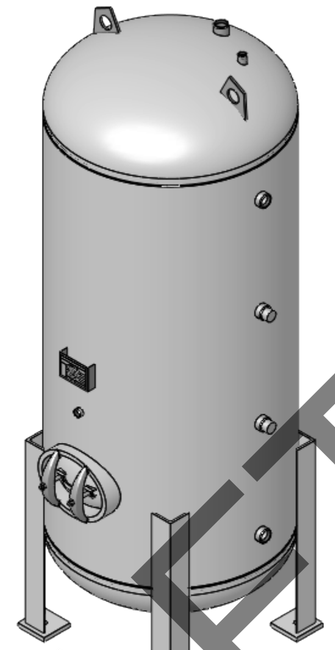

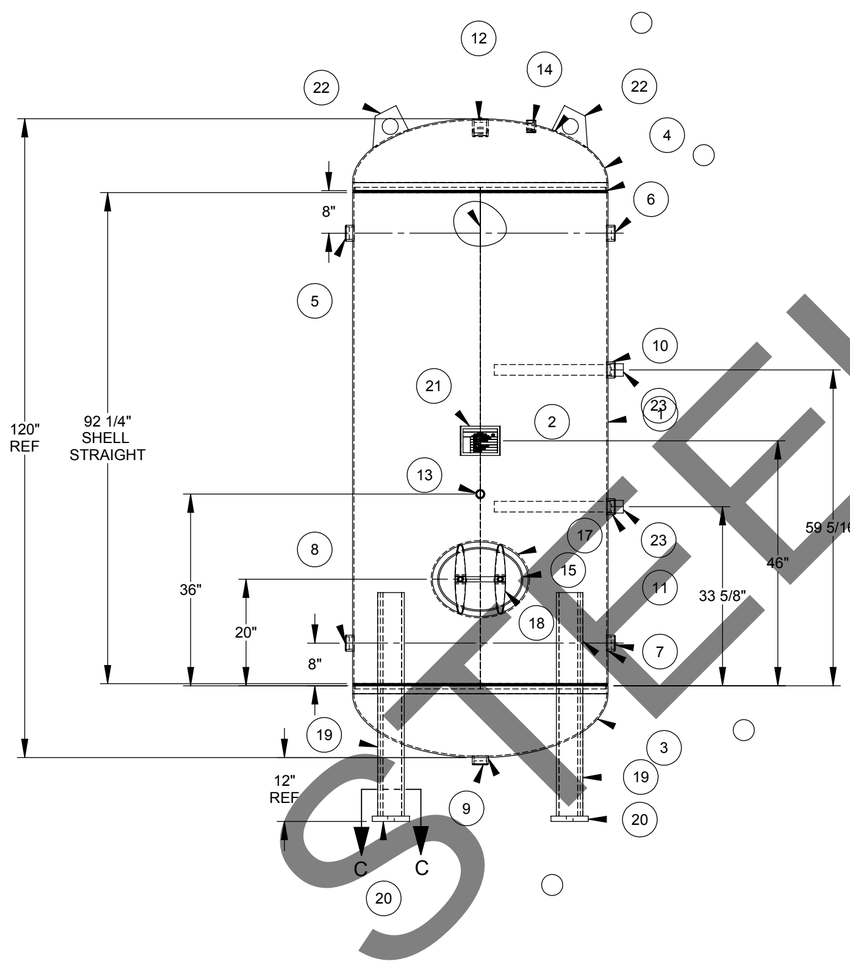

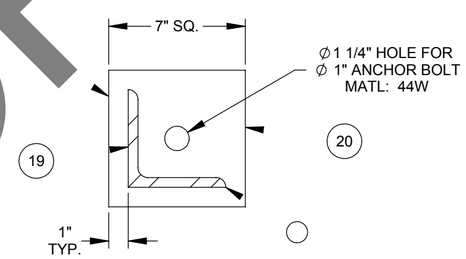

SECTION C-C
BASE PLATE DETAIL

ITEM NO.	QTY.	PART NO.	DESCRIPTION
1	1	A43945-01	Cylinder: 48" O.D. x 94" Lg.
2	1	A43940 - NP	ASME NAMEPLATE
3	1	HDSE048001FJ	Head: S.E., 48" O.D.
4	1	HDSE048001FJ	Head: S.E., 48" O.D.
5	1	CPHT200300XU	Coupling: 2" NPT
6	1	CPHT200300XU	Coupling: 2" NPT
7	1	CPHT200300XU	Coupling: 2" NPT
8	1	CPHT200300XU	Coupling: 2" NPT
9	1	CPHT200300XU	Coupling: 2" NPT
10	1	CPHT200300XU	Coupling: 2" NPT
11	1	CPHT200300XU	Coupling: 2" NPT
12	1	CPFT200300XU	Coupling: 2" NPT
13	1	CPHT100300XU	Coupling: 1" NPT
14	1	CPFT100300XU	Coupling: 1" NPT
15	1	MHCO121640UC	Manway Collar: 12" x 16" x 1" x 4" Wide
16	1	GSKO121600XY	Manway Gasket
17	1	CVRB121615XC	Manway Cover
18	2		Manway Yoke c/w Bolt & Nut
19	4	A43940-L	5" X 5" X 42" LG ANGLE
20	4	A43940-FP	7" X 7" X 1" Thk. FOOT PAD WITH 1-1/4" HOLE
21	1	BKPL400055XC	Nameplate Bracket
22	2	LLTV050075QC	Lift Lug
23	2	ANDA200220XM	Anode, 2" Screwed Magnesium

Design Specifications

M.A.W.P.: 150 psi
Design Temperature: 500 °F
M.D.M.T.: 0°F @ 150 psi
Impact Testing Exempt per UG-20(f) & UCS-66
Design External Pressure: 0.0 psi
Hydrotest Pressure: 195 psi
Corrosion Allowance: 0.0 in.
Code: ASME Section VIII, Div. 1 2017
Approximate Volume: 3069 L
Approximate Weight: 2767 lbs
Material of Construction: Carbon Steel

Finish

Interior:
Line with Cement to CSA, NSF/ANSI 61 Standard
Exterior:
-Primer

Construction Notes

-Bolt holes to straddle centerlines.
-This vessel is designed with superimposed static, dynamic or cyclical reactions due to equipment or mechanical loading, or pressure or thermal variations = 0 lbs.
-This vessel is designed with thermal, mechanical, cyclical, pressure or fluid shock loadings = 0 lbs.
-Round or chamfer all sharp interior corners.
-This vessel is designed to contain a non-lethal gas, vapour or a non-lethal liquid.

TOLERANCES UNLESS OTHERWISE NOTED

MACHINING
.X = ±.1"
.XX = ±.02"
.XXX = ±.005"
ANGLES ±.5°
MAX.MACHINED SURFACE ROUGHNESS 125 MICROINCHES

WELD FABRICATION
<=24" = ±1/16"
>24" = ±1/8"
ANGLES = ± 0.5°
3RD ANGLE PROJECTION

STEELCRAFT
Engineered Products Division
487 Lorne Avenue East, PO Box 339, Stratford, Ontario N5A 6T1
P. 1.800.387.6537 F. 519.27[illegible].1092 www.steelcraftinc.com

THIS PRINT AND DESIGN ARE THE PROPERTY OF STEELCRAFT INC. AND MUST NOT BE USED TO ITS DETRIMENT.

PRODUCT: 48" O.D. X 120" HIGH STD PV

DESCRIPTION: MAIN ASSEMBLY

COMMENTS: SEE BOM FOR MATERIALS

DRAWN:	CHK'D:	SCALE:	JOB No.:	DRAWING. No.:	SHEET 1 OF 1	REV. No.:
PEK	PEK	NTS	SCDHWT48X120	CL43945		0
DATE: 12/08/2019	DATE: -	WEIGHT: 1837				

STEELCRAFT INC.