STEELCRAFT P/N: SCDHWT60X108

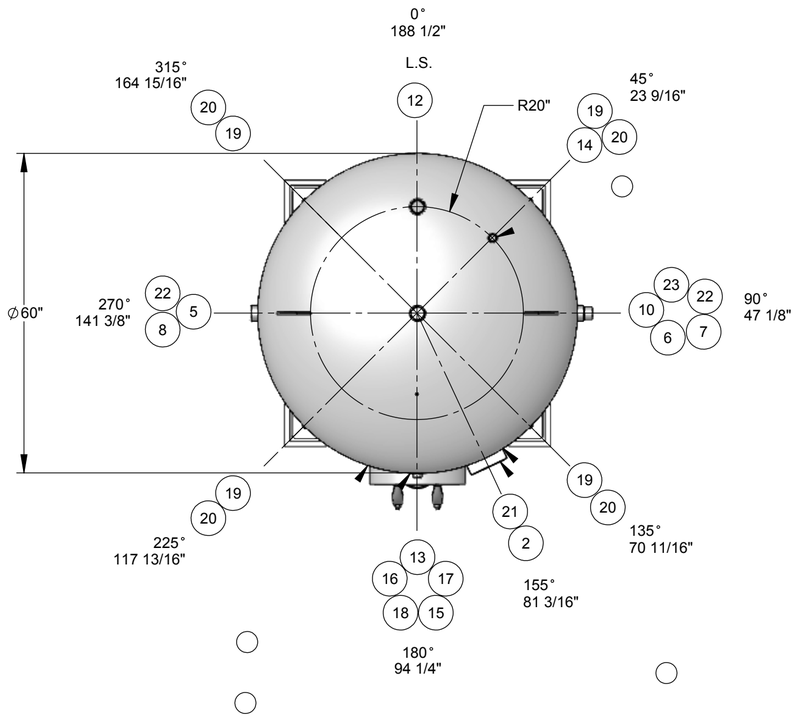

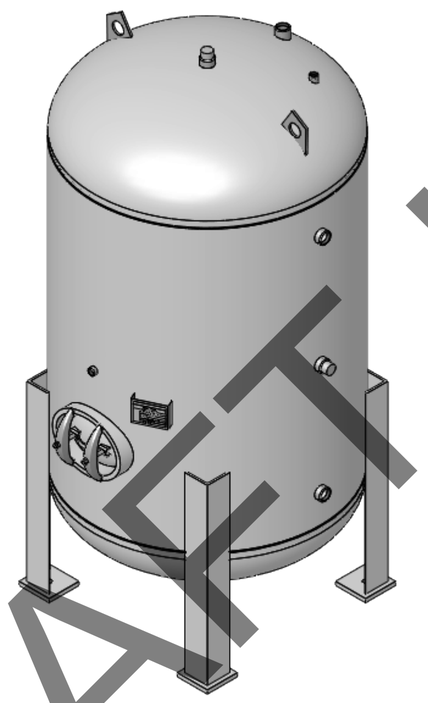

ITEM NO.	QTY.	PART NO.	DESCRIPTION
1	1	A43965-01	Cylinder: 60" O.D. x 76" Lg.
2	1	A43962 - NP	ASME NAMEPLATE
3	1	HDSE060001FJ	Head: S.E., 60" O.D.
4	1	HDSE060001FJ	Head: S.E., 60" O.D.
5	1	CPHT200300XU	Coupling: 2" NPT
6	1	CPHT200300XU	Coupling: 2" NPT
7	1	CPHT200300XU	Coupling: 2" NPT
8	1	CPHT200300XU	Coupling: 2" NPT
9	1	CPHT200300XU	Coupling: 2" NPT
10	1	CPHT200300XU	Coupling: 2" NPT
11	1	CPHT200300XU	Coupling: 2" NPT
12	1	CPFT200300XU	Coupling: 2" NPT
13	1	CPHT100300XU	Coupling: 1" NPT
14	1	CPFT100300XU	Coupling: 1" NPT
15	1	MHCO121640UC	Manway Collar: 12" x 16" x 1" x 4" Wide
16	1	GSKO121600XY	Manway Gasket
17	1	CVRB121615XC	Manway Cover
18	2		Manway Yoke c/w Bolt & Nut
19	4	A43962-L	6" X 6" X 46" LG ANGLE
20	4	A43962-FP	8" X 8" X 1" Thk. FOOT PAD WITH 1-1/4" HOLE
21	1	BKPL400055XC	Nameplate Bracket
22	2	LLTV050075QC	Lift Lug
23	2	ANDA200220XM	Anode, 2" Screwed Magnesium

Design Specifications

M.A.W.P.: 150 psi
Design Temperature: 500 °F
M.D.M.T.: 0°F @ 150 psi
Impact Testing Exempt per UG-20(f) & UCS-66
Design External Pressure: 0.0 psi
Hydrotest Pressure: 195 psi
Corrosion Allowance: 0.0 in.
Code: ASME Section VIII, Div. 1 2017
Approximate Volume: 4232 L
Approximate Weight: 3645 lbs
Material of Construction: Carbon Steel

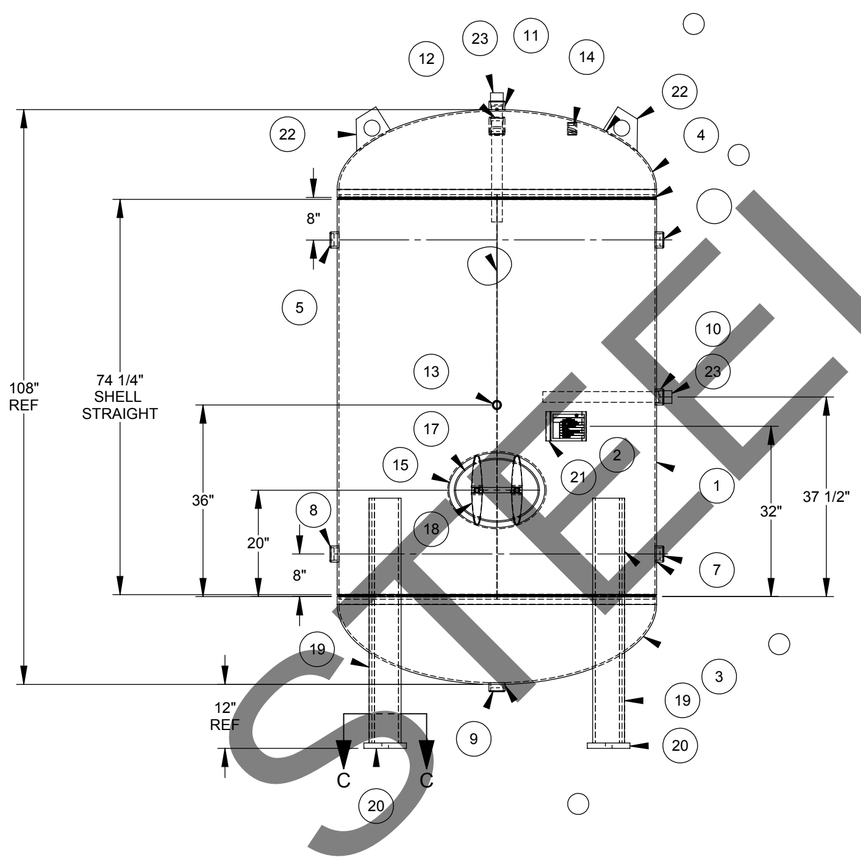

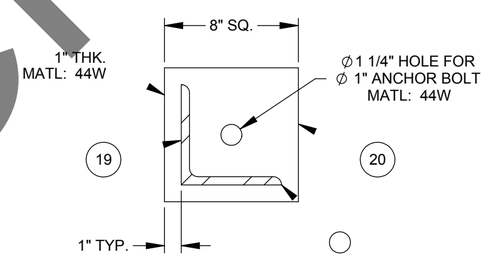

SECTION C-C
BASE PLATE DETAIL

Finish
Interior:
Line with Cement to CSA, NSF/ANSI 61 Standard
Exterior:
- Primer

Construction Notes

-Bolt holes to straddle centerlines.
-This vessel is designed with superimposed static, dynamic or cyclical reactions due to equipment or mechanical loading, or pressure or thermal variations = 0 lbs.
-This vessel is designed with thermal, mechanical, cyclical, pressure or fluid shock loadings = 0 lbs.
-Round or chamfer all sharp interior corners.
-This vessel is designed to contain a non-lethal gas, vapour or a non-lethal liquid.

TOLERANCES UNLESS OTHERWISE NOTED

MACHINING
.X = ±.1"
.XX = ±.02"
.XXX = ±.005"
ANGLES ±.5°
MAX.MACHINED SURFACE ROUGHNESS 125 MICROINCHES

WELD FABRICATION
<=24" = ±1/16"
>24" = ±1/8"
ANGLES = ± 0.5°
3RD ANGLE PROJECTION

STEELCRAFT
Engineered Products Division
487 Lorne Avenue East. PO Box 339, Stratford. Ontario N5A 6T1
P. 1.800.387.6537 F. 519.27 .1092 www.steelcraftinc.com

THIS PRINT AND DESIGN ARE THE PROPERTY OF STEELCRAFT INC. AND MUST NOT BE USED TO ITS DETRIMENT.

PRODUCT: 60" O.D. X 108" HIGH STD PV

DESCRIPTION: MAIN ASSEMBLY

COMMENTS: SEE BOM FOR MATERIALS

DRAWN:	CHK'D:	SCALE:	JOB No.:	DRAWING. No.:	SHEET 1 OF 1	REV. No.:
PEK	PEK	NTS	SCDHWT60X108	CL43965		0
DATE: 16/08/2019	DATE: -	WEIGHT: 2528				

FORM ENG-002 REV.3

STEELCRAFT INC. DRAFT